INDUSTRIAL HORIZONTAL AIR RECEIVERS

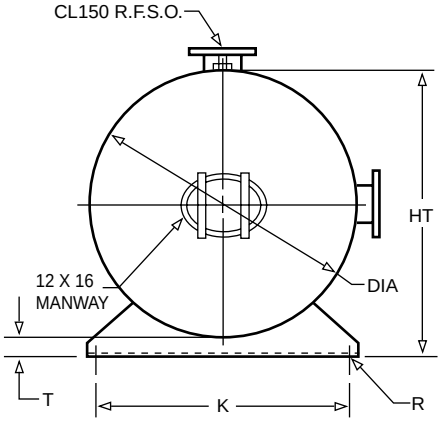

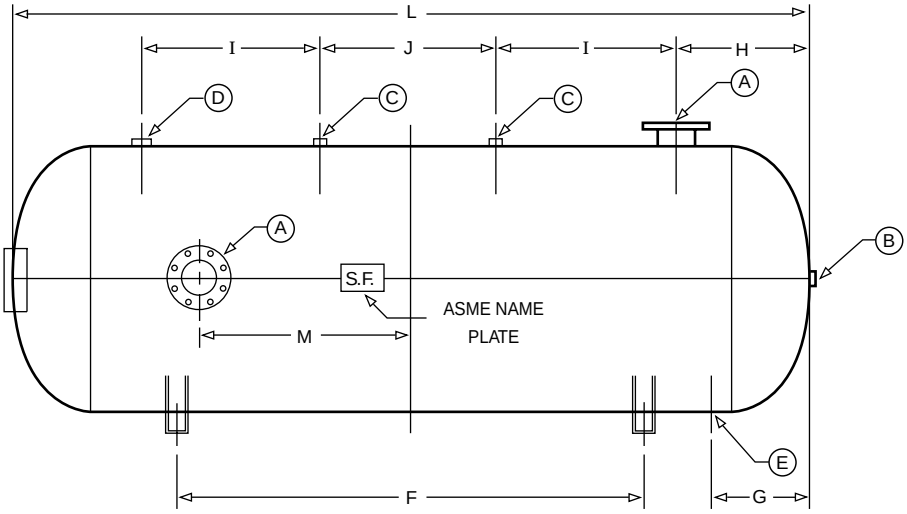

					OPENINGS (NPT)"					DIMENSIONS "									
P/N	PSI	GAL	DIA	L	A	B	C	D	E	F	G	H	I	J	K	R	M	HT	T
A10358	150	660	42	120	4	2	1/2	1-1/2	1	70	16	17	18	27	40	3/4	31	50	4
A10368	155	1060	48	144	6	2	1/2	2	1	84	18	24	32	32	44	3/4	38	56	4
A10370	137																		
A10376	137	1550	54	166	6	2	1/2	2	1	98	19	26	39	40	52	3/4	50	62	4
C102888	137	1350	54	148	6	2	1/2	2	1	80	19	26	33	30	52	3/4	41	62	4
C102889	165																		
A10376	137	1550	54	166															
C102890	150	1660	60	150	6	2	1/2	3	1	74	21	27	30	36	56	3/4	38	71	4
A10665	150	2000	60	174	6	2	1/2	3	1	98	21	27	39	40	56	3/4	50	68	4
A10392	150	2560	60	220	6	2	1/2	3	1	112	21	27	55	56	56	3/4	74	68	4
A10400	137	3000	66	214	6	2	1/2	3	1	110	23	29	52	56	56	3/4	71	74	4
A10402	125	3800	72	228	6	2	1/2	3	1	114	25	31	54	56	56	3/4	78	80	4
A10404	150																		
C101567	125	4500	78	235	6	2	1/2	3	1	114	26	34	54	56	58	3/4	82	88	4
C101568	150																		
C101569	125	5200	84	238	6	2	1/2	3	1	114	28	34	54	56	64	3/4	85	94	4
C101570	150																		
C101571	125	6000	90	241	6	2	1/2	3	1	114	30	36	54	56	70	3/4	88	100	4
C101572	150																		
C101573	125	7000	96	244	6	2	1/2	3	1	114	31	38	54	56	76	3/4	88	106	4
C101574	150																		
C101575	125	8000	102	247	6	2	1/2	3	1	114	33	40	54	56	82	3/4	90	112	4
C101576	150																		